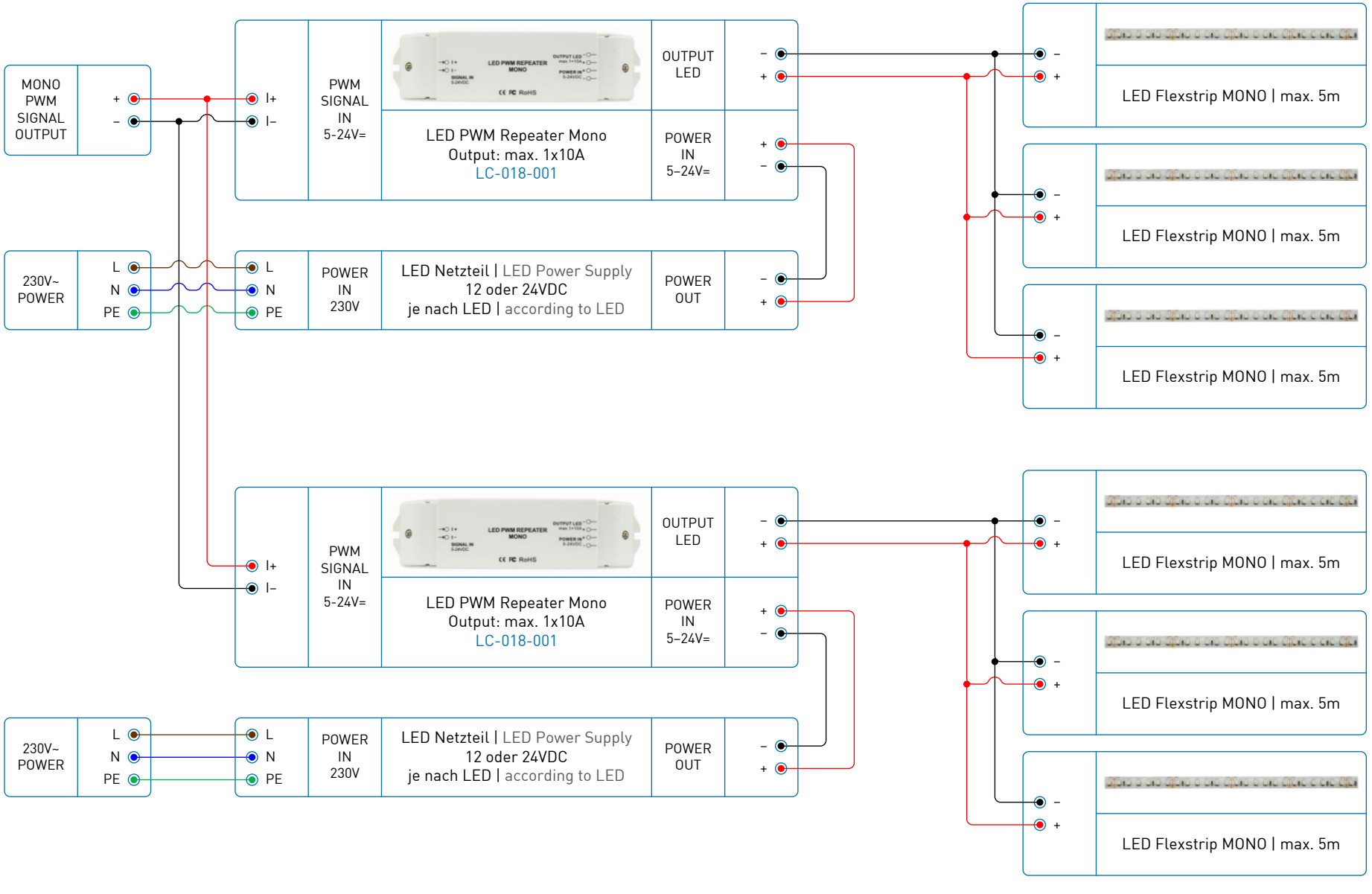
MONO PWM SIGNAL OUTPUT
+
–
I+
I–
PWM SIGNAL IN 5-24V=
LED PWM Repeater Mono
Output: max. 1x10A
LC-018-001
OUTPUT LED
POWER IN 5–24V=
230V~ POWER
L
N
PE
POWER IN 230V
LED Netzteil | LED Power Supply
12 oder 24VDC
je nach LED | according to LED
POWER OUT
LED Flexstrip MONO | max. 5m
LED Flexstrip MONO | max. 5m
LED Flexstrip MONO | max. 5m
I+
I–
PWM SIGNAL IN 5-24V=
LED PWM Repeater Mono
Output: max. 1x10A
LC-018-001
OUTPUT LED
POWER IN 5–24V=
230V~ POWER
L
N
PE
POWER IN 230V
LED Netzteil | LED Power Supply
12 oder 24VDC
je nach LED | according to LED
POWER OUT
LED Flexstrip MONO | max. 5m
LED Flexstrip MONO | max. 5m
LED Flexstrip MONO | max. 5m