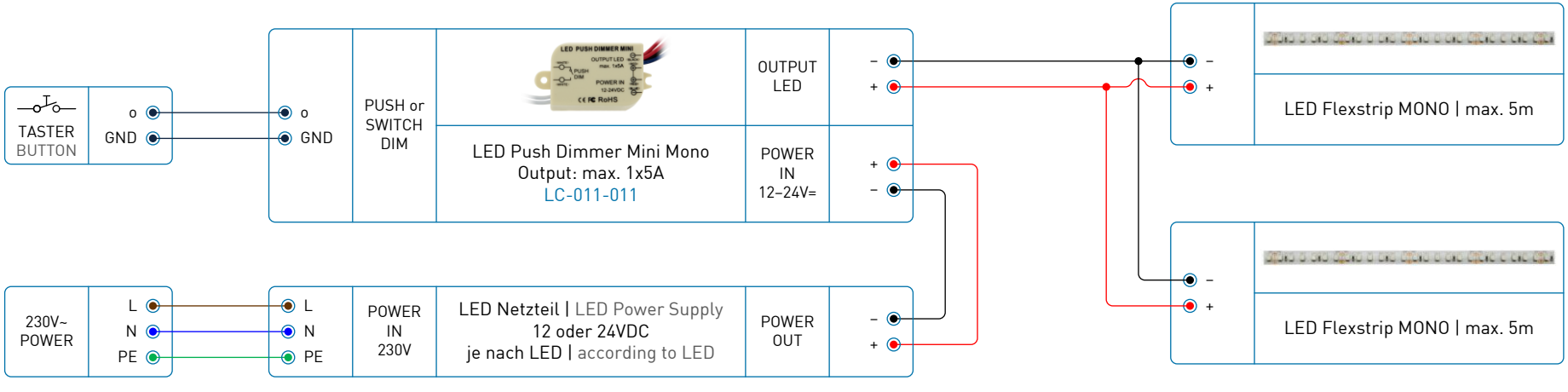
TASTER
BUTTON
o
GND
o
GND
PUSH or
SWITCH
DIM
LED Push Dimmer Mini Mono
Output: max. 1x5A
LC-011-011
OUTPUT
LED
POWER
IN
12–24V=
LED Flexstrip MONO | max. 5m
LED Flexstrip MONO | max. 5m
230V~
POWER
L
N
PE
L
N
PE
POWER
IN
230V
LED Netzteil | LED Power Supply
12 oder 24VDC
je nach LED | according to LED
POWER
OUT