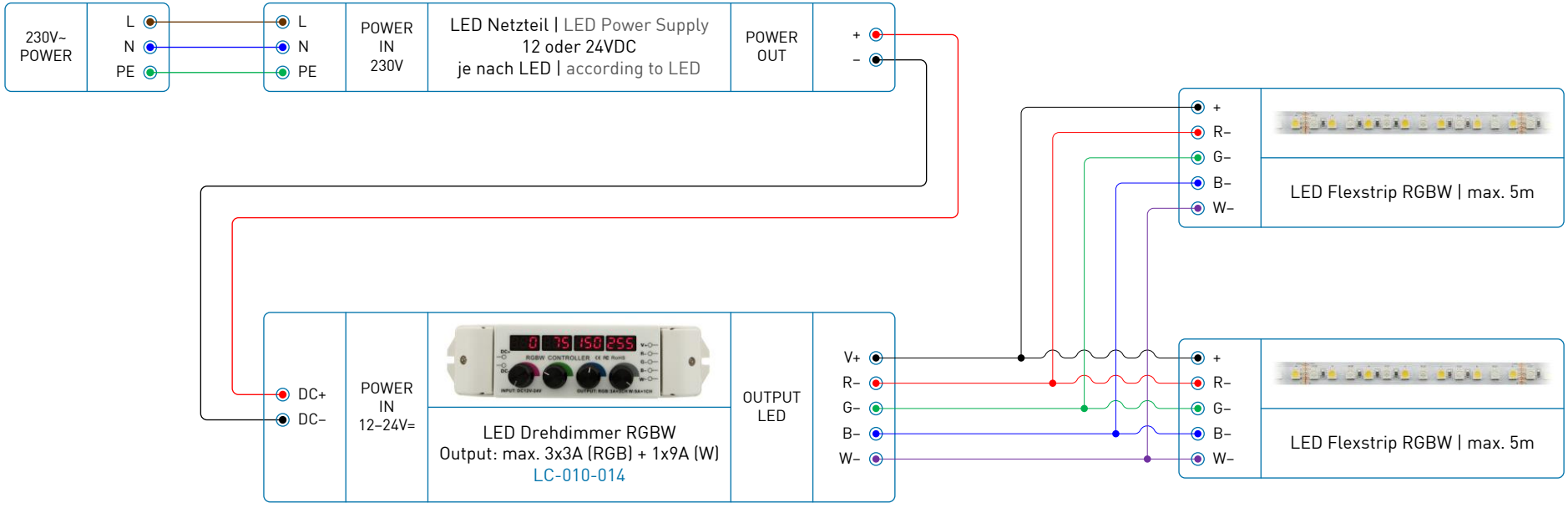
230V~
POWER
L
N
PE
L
N
PE
POWER
IN
230V
LED Netzteil | LED Power Supply
12 oder 24VDC
je nach LED | according to LED
POWER
OUT
+
–
DC+
DC–
POWER
IN
12–24V=
LED Drehdimmer RGBW
Output: max. 3x3A (RGB) + 1x9A (W)
LC-010-014
OUTPUT
LED
V+
R–
G–
B–
W–
+
R–
G–
B–
W–
LED Flexstrip RGBW | max. 5m
+
R–
G–
B–
W–
LED Flexstrip RGBW | max. 5m