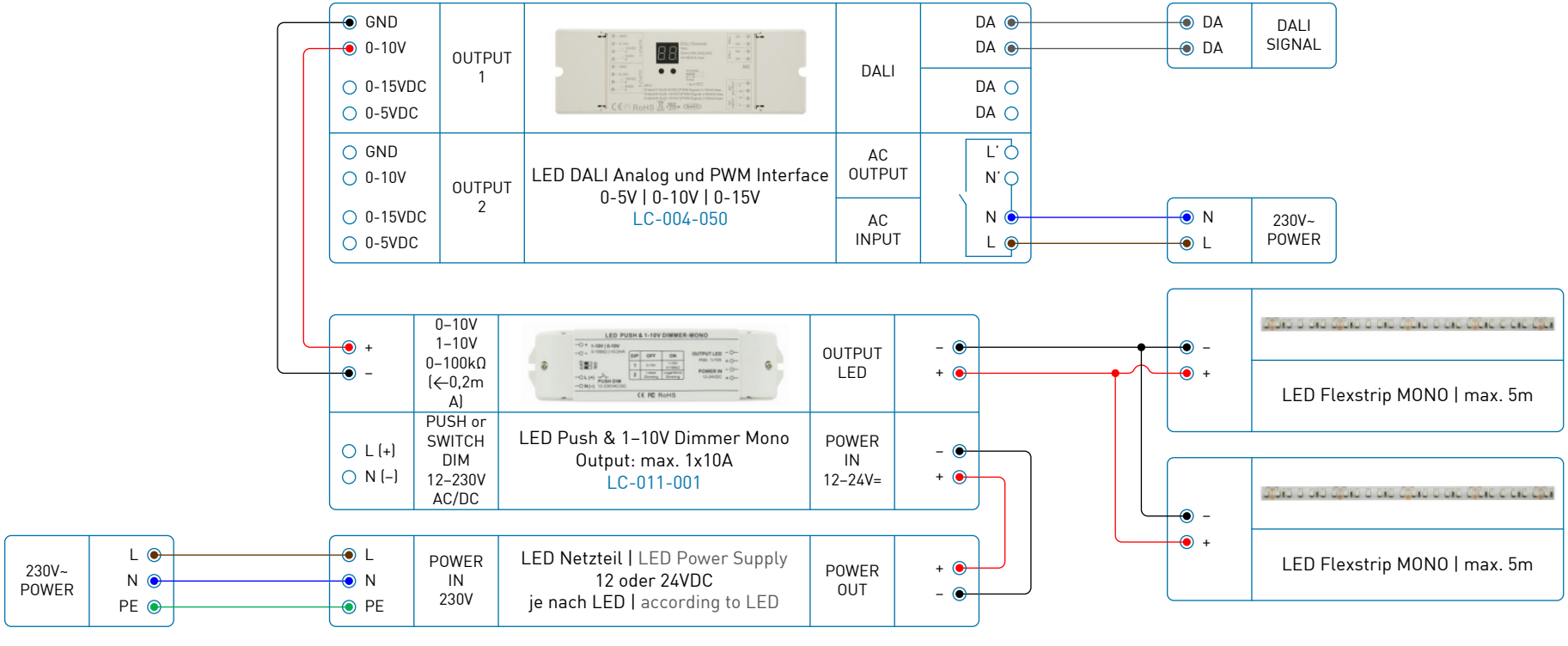
GND
0-10V
0-15VDC
0-5VDC
OUTPUT 1
DALI
DA
DA
DA
DA
DA
DA
DALI SIGNAL
GND
0-10V
0-15VDC
0-5VDC
OUTPUT 2
LED DALI Analog und PWM Interface
0-5V | 0-10V | 0-15V
LC-004-050
AC OUTPUT
AC INPUT
L'
N'
N
L
N
L
230V~ POWER
+
–
0–10V
1–10V
0–100kΩ
(←0,2mA)
OUTPUT LED
–
+
–
+
LED Flexstrip MONO | max. 5m
L (+)
N (–)
PUSH or SWITCH DIM
12–230V AC/DC
LED Push & 1–10V Dimmer Mono
Output: max. 1x10A
LC-011-001
POWER IN 12–24V=
–
+
–
+
LED Flexstrip MONO | max. 5m
230V~ POWER
L
N
PE
L
N
PE
POWER IN 230V
LED Netzteil | LED Power Supply
12 oder 24VDC
je nach LED | according to LED
POWER OUT
+
–