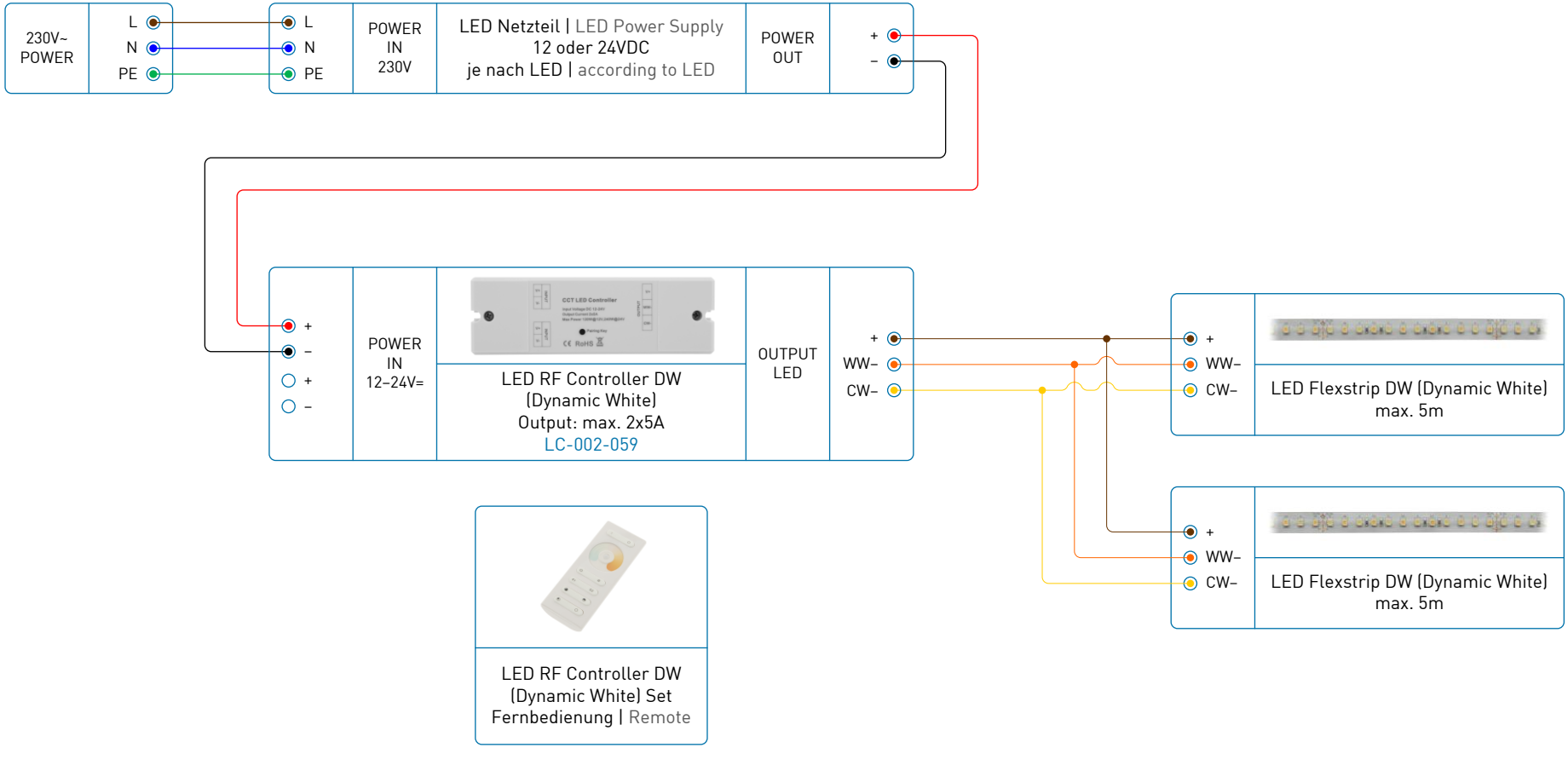
230V~
POWER
L
N
PE
L
N
PE
POWER
IN
230V
LED Netzteil | LED Power Supply
12 oder 24VDC
je nach LED | according to LED
POWER
OUT
+
–
+
–
+
–
POWER
IN
12–24V=
LED RF Controller DW
(Dynamic White)
Output: max. 2x5A
LC-002-059
OUTPUT
LED
+
WW–
CW–
+
WW–
CW–
LED Flexstrip DW (Dynamic White)
max. 5m
+
WW–
CW–
LED Flexstrip DW (Dynamic White)
max. 5m
LED RF Controller DW
(Dynamic White) Set
Fernbedienung | Remote