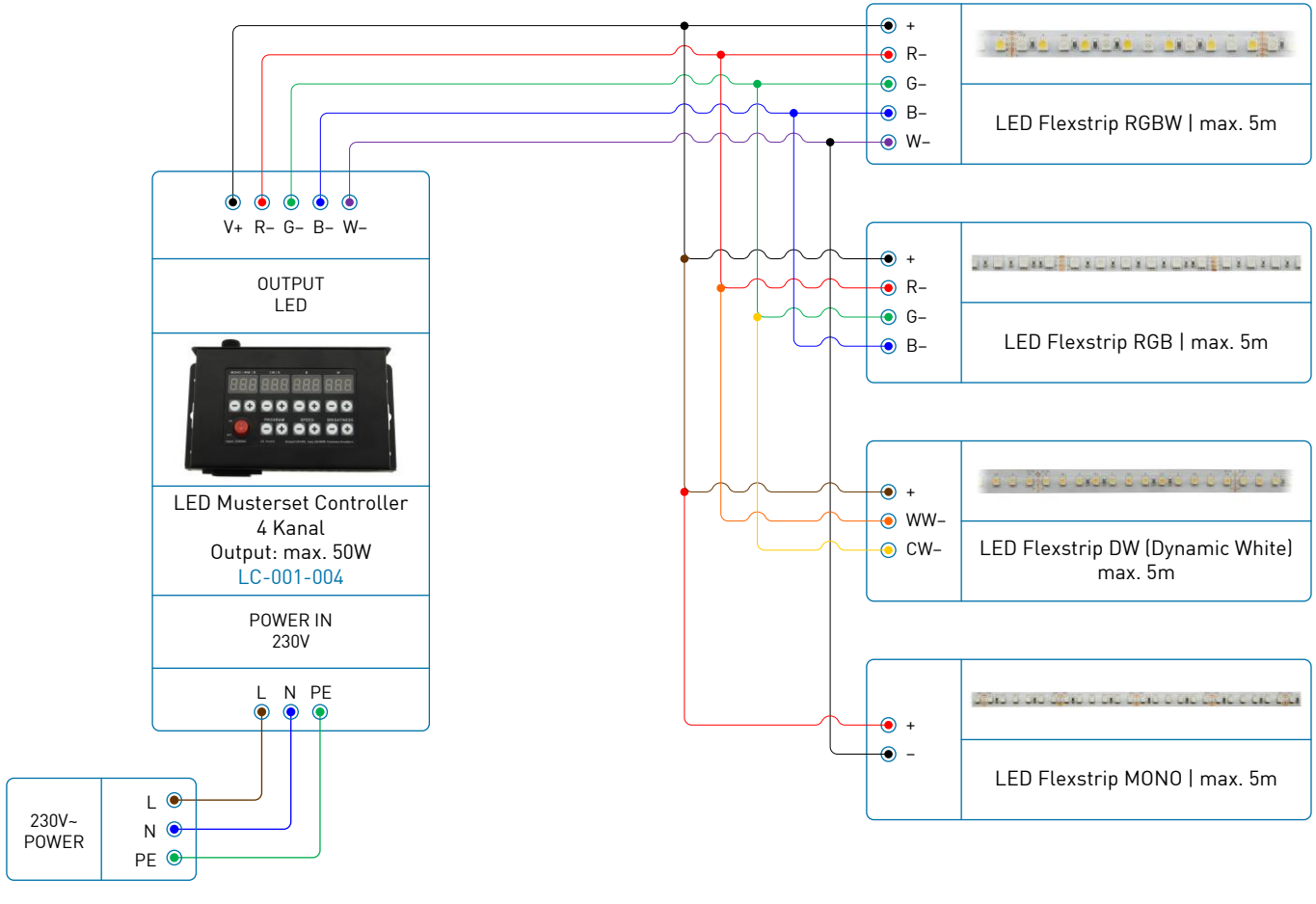
V+ R– G– B– W–
OUTPUT
LED
LED Musterset Controller
4 Kanal
Output: max. 50W
LC-001-004
POWER IN
230V
L N PE
230V~
POWER
L
N
PE
+
R–
G–
B–
W–
LED Flexstrip RGBW | max. 5m
+
R–
G–
B–
LED Flexstrip RGB | max. 5m
+
WW–
CW–
LED Flexstrip DW (Dynamic White)
max. 5m
+
–
LED Flexstrip MONO | max. 5m