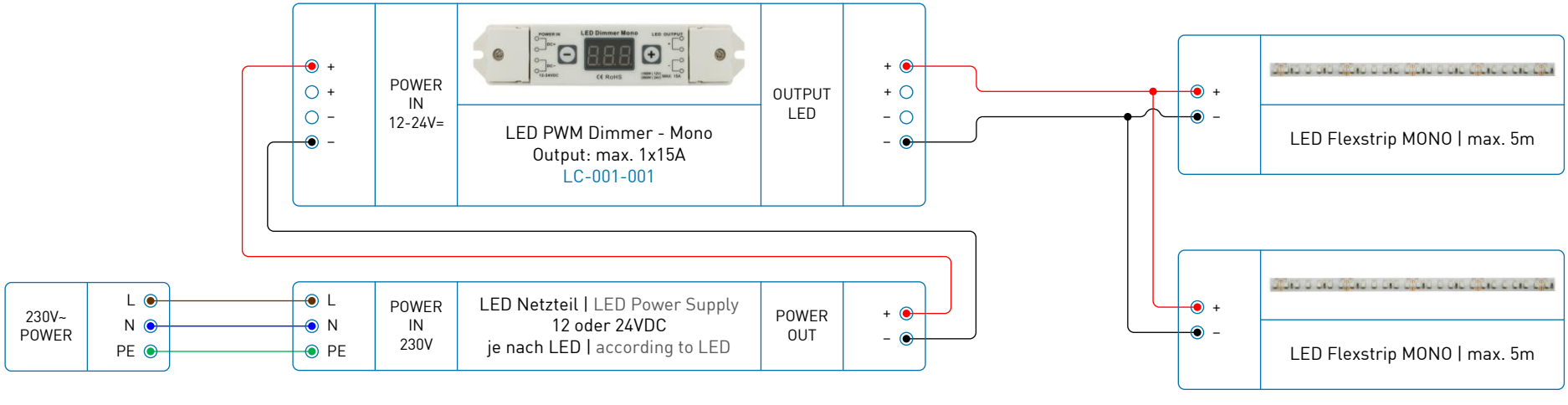
+
+
–
–
POWER
IN
12-24V=
LED PWM Dimmer - Mono
Output: max. 1x15A
LC-001-001
OUTPUT
LED
+
+
–
–
LED Flexstrip MONO | max. 5m
LED Flexstrip MONO | max. 5m
230V~
POWER
L
N
PE
L
N
PE
POWER
IN
230V
LED Netzteil | LED Power Supply
12 oder 24VDC
je nach LED | according to LED
POWER
OUT
+
–