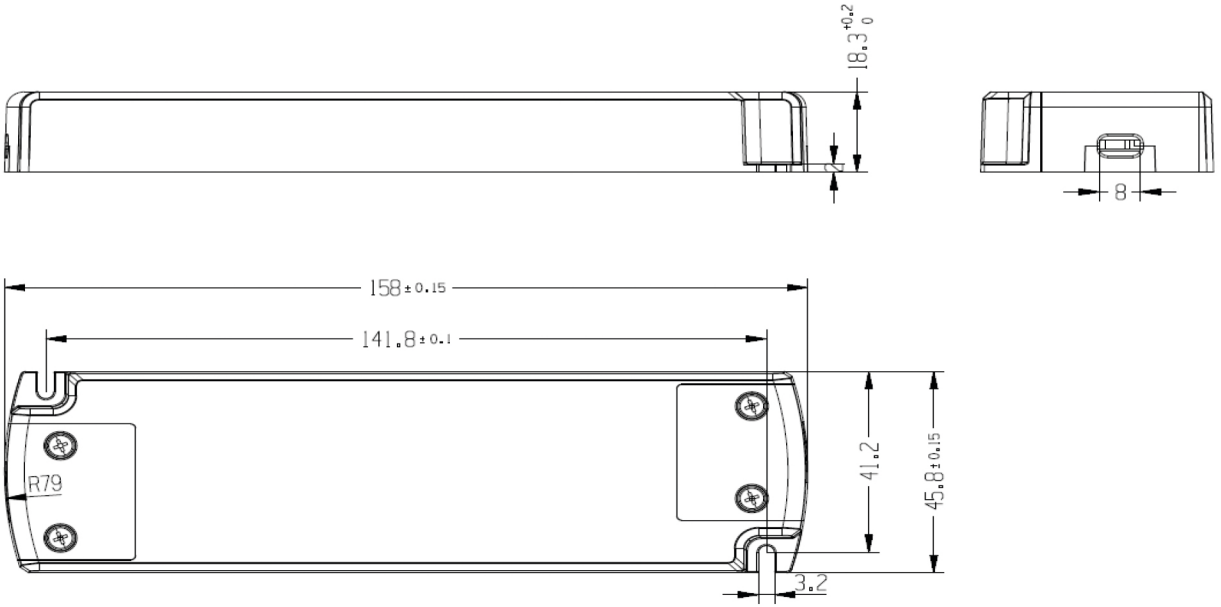
18.3 +0.2 0
2
8
158±0.15
141.8±0.1
R79
41.2
45.8±0.15
3.2