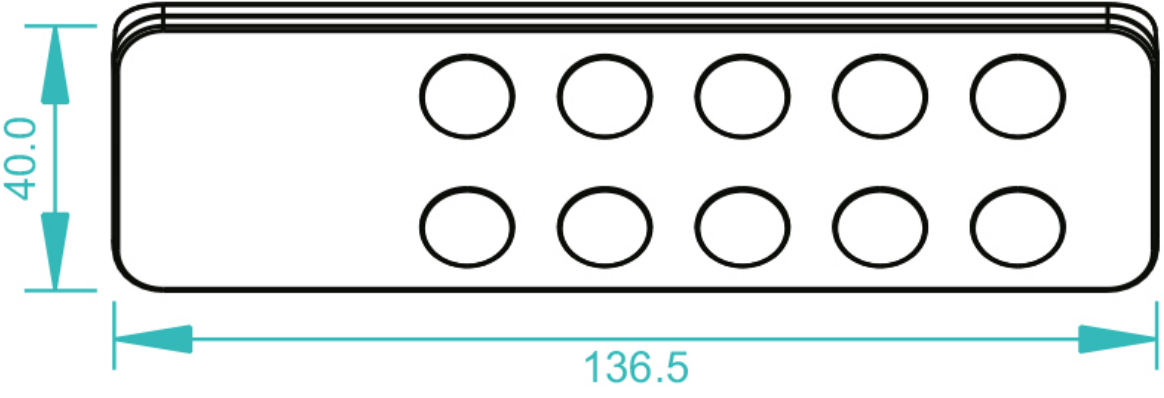
40.0
136.5

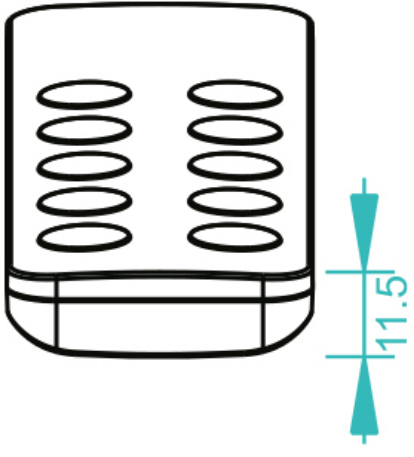
11.5