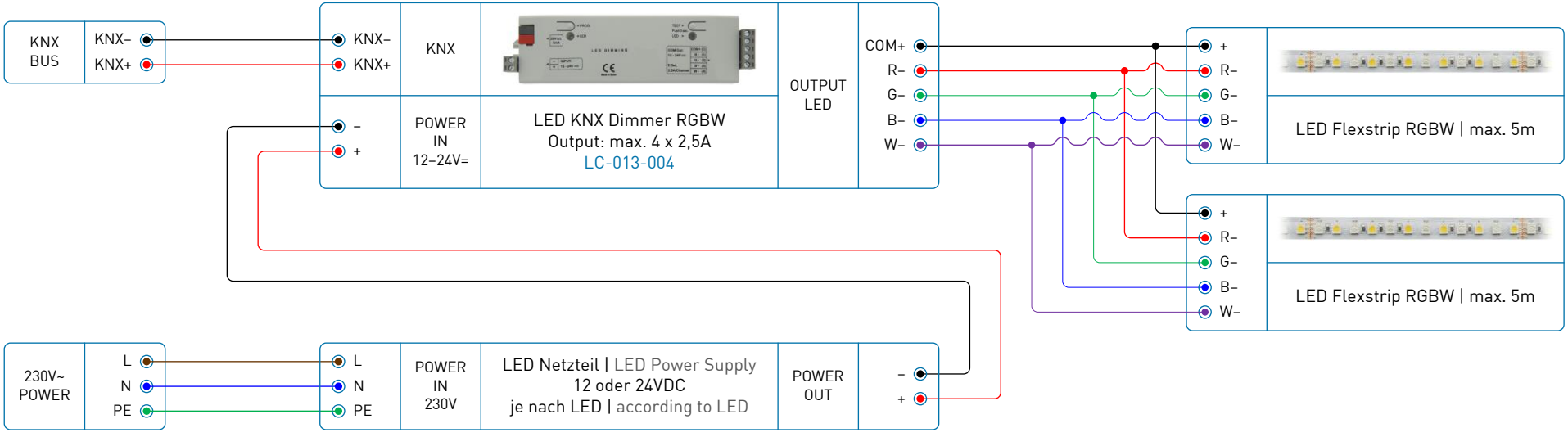
KNX BUS
KNX–
KNX+
KNX–
KNX+
KNX
–
+
POWER IN 12–24V=
LED KNX Dimmer RGBW
Output: max. 4 x 2,5A
LC-013-004
OUTPUT LED
COM+
R–
G–
B–
W–
+
R–
G–
B–
W–
LED Flexstrip RGBW | max. 5m
+
R–
G–
B–
W–
LED Flexstrip RGBW | max. 5m
230V~ POWER
L
N
PE
L
N
PE
POWER IN 230V
LED Netzteil | LED Power Supply
12 oder 24VDC
je nach LED | according to LED
POWER OUT
–
+