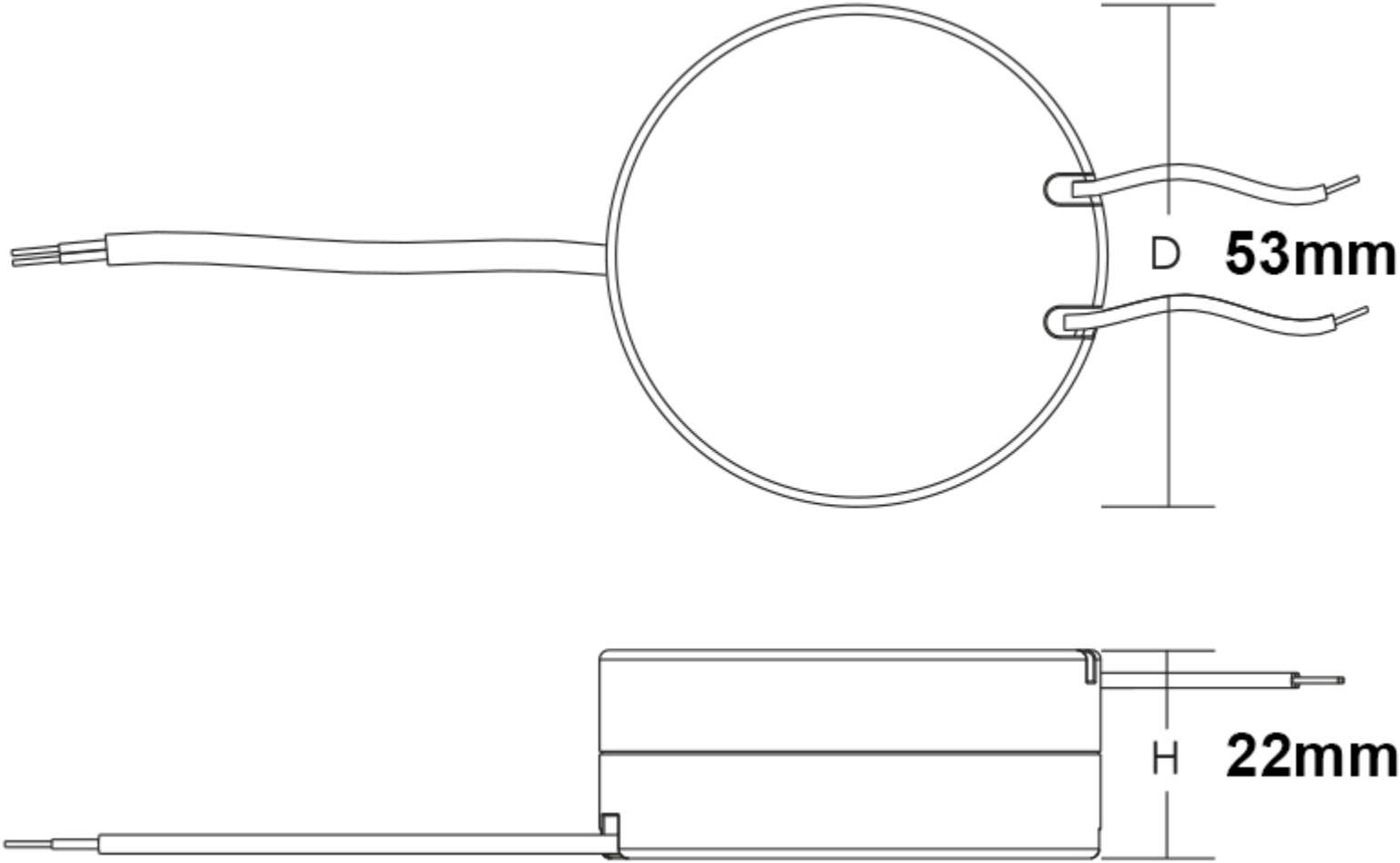
D
53mm
H
22mm