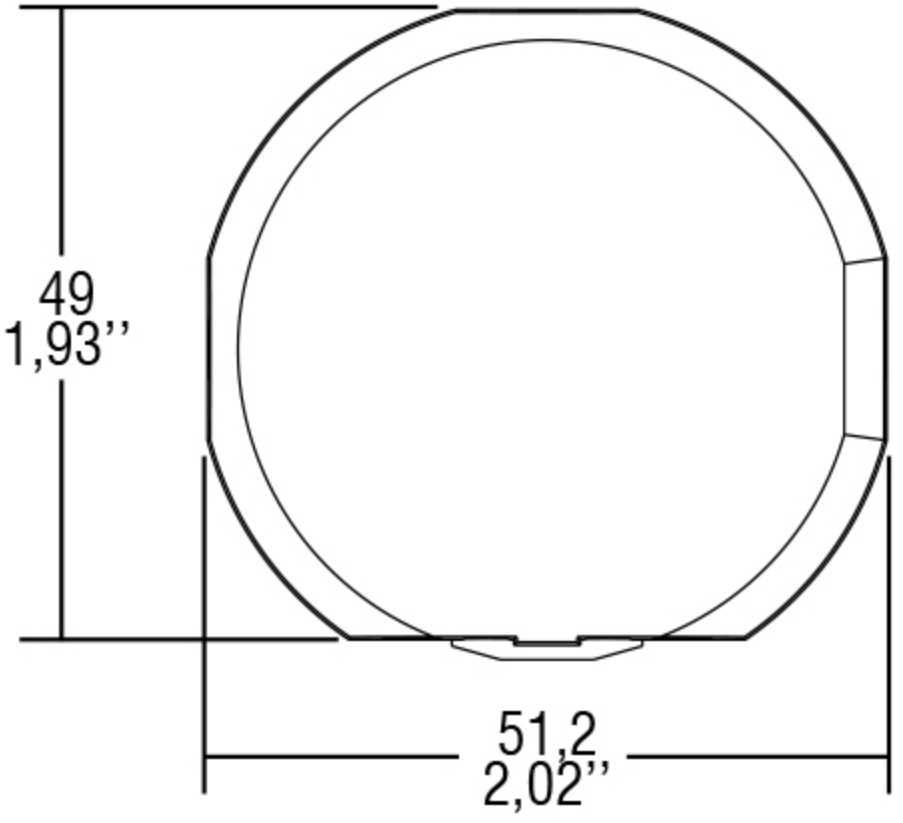
49
1,93''
51,2
2,02''

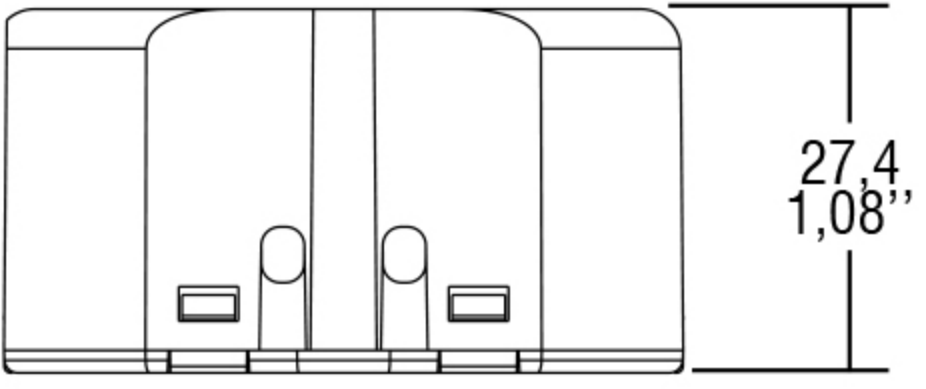
27,4
1,08''