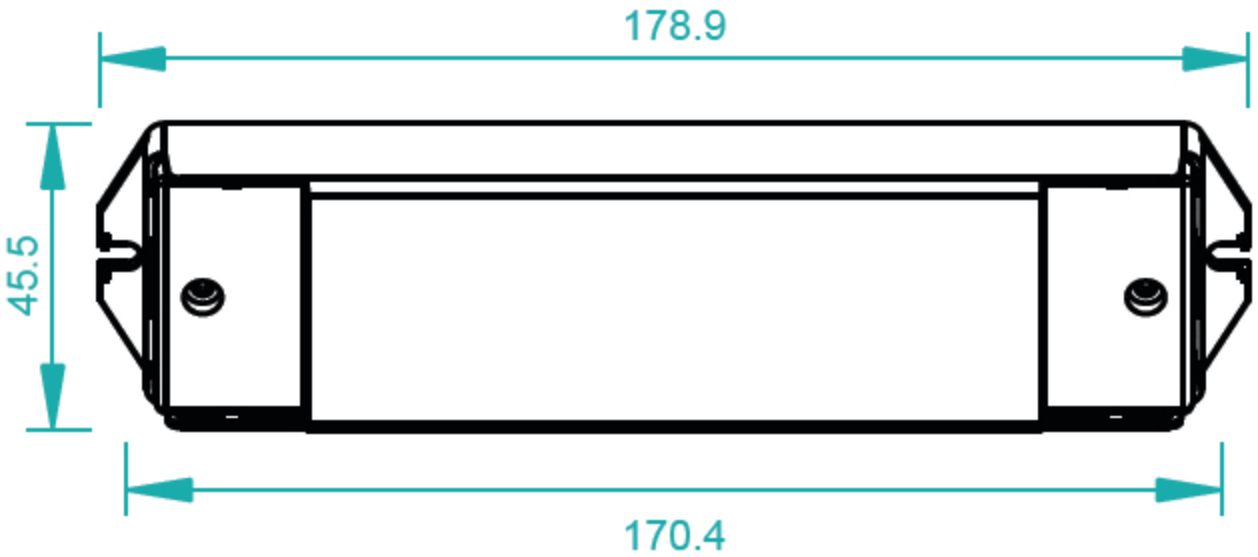
178.9
45.5
170.4

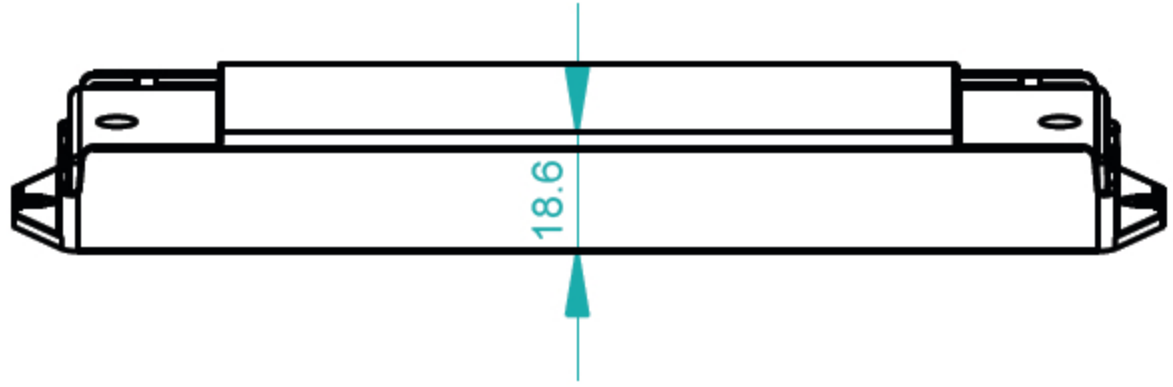
18.6